80×80×38 mm

San Ace 80 9HVA type

General Specifications

- Material ..... Frame: Plastic (Flammability: UL 94V-0), Impeller: Plastic (Flammability: UL 94V-0)
- Expected life ..... See the table below. (L10 life: 90% survival rate for continuous operation in free air at 60˚C, rated voltage) Expected life at 40°C is for reference only.
- Motor protection function ..... Locked rotor burnout protection, Reverse polarity protection For details, please refer to p. 616.
- Dielectric strength ..... 50/60 Hz, 500 VAC, for 1 minute (between lead wire conductors and frame)
- Insulation resistance ..... 10 MΩ min. at 500 VDC (between lead wire conductors and frame)
- Sound pressure level (SPL) ..... A-weighted sound pressure level (SPL) at 1 m away from the air inlet.
- Storage temperature ..... -30 to +70˚C (Non-condensing)
- Lead wire ..... ⊕Red ⊖Black Sensor Yellow Control Brown
- Mass ..... 220 g

Specifications

The models listed below **have ribs and a pulse sensor with PWM control.** For models without ribs, append "1" to the end of model numbers.

Model no.	Rated voltage [V]	Operating voltage range [V]	PWM duty cycle* [%]	Rated current [A]	Rated input [W]	Rated speed [min⁻¹]	Max. airflow [m³/min]	Max. airflow [CFM]	Max. static pressure [Pa]	Max. static pressure [inchH₂O]	SPL [dB (A)]	Operating temperature [˚C]	Expected life [h]
9HVA0848P1G601	48	36 to 57	100	0.9	43.2	16100	3.75	132	1250	5.0	73	-20 to +70	40000/60˚C (70000/40˚C)
			20	0.07	3.36	4200	0.96	33.9	105	0.42	44		

* PWM frequency is 25 kHz. Models without ratings for 0% PWM duty cycle have zero speed at 0%. When control terminal is open, speed is the same as at 100% duty cycle.

Airflow - Static Pressure Characteristics / PWM Duty - Speed Characteristics Example

9HVA0848P1G601 With pulse sensor with PWM control

PWM duty cycle

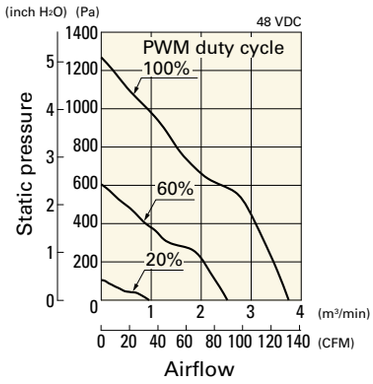

Operating voltage range

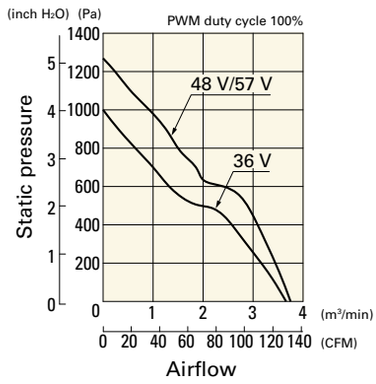

PWM duty - Speed characteristics example

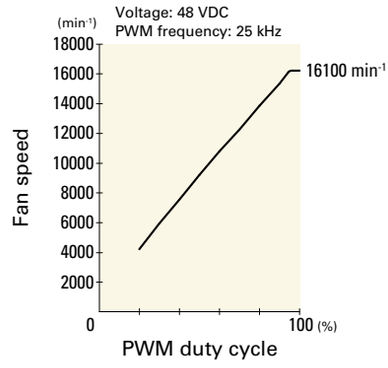

Beijing Hengrui Mechanical and Electrical Equipment Co,Ltd
+86 10-62547612 zhangyu@bjhengrui.cn en.bjhengrui.com

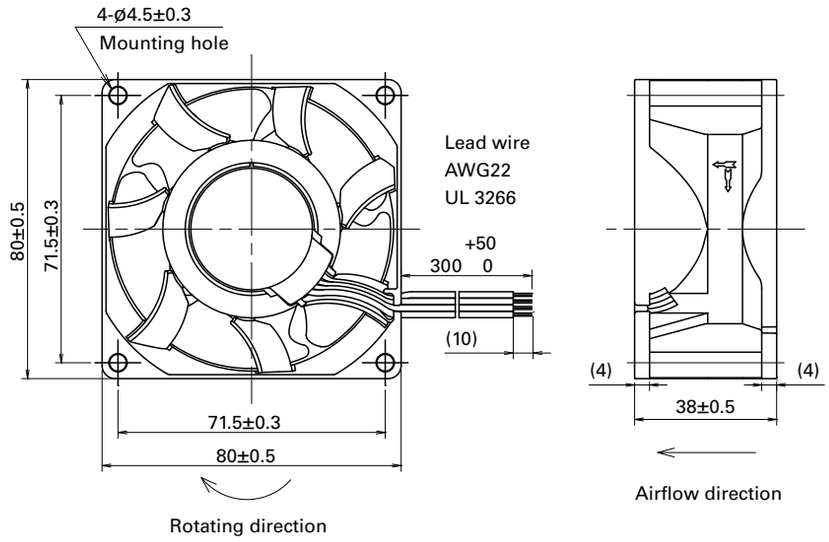

Reference Dimensions of Mounting Holes and Vent Opening (unit: mm)

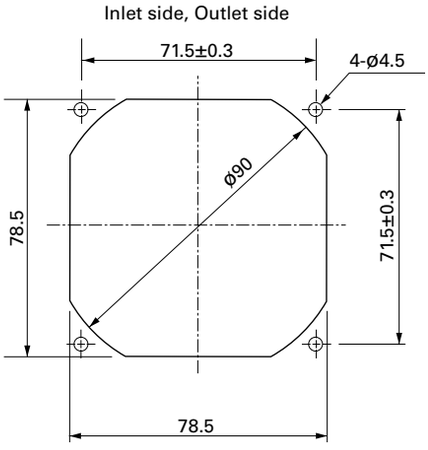

Options

Finger guards page: p. 598

Model no.: 109-049E, 109-049H

Resin finger guards page: p. 605

Model no.: 109-1002G

Resin filter kits page: p. 606

Model no.: 109-1002F13 (13PPI), 109-1002F20 (20PPI),
109-1002F30 (30PPI), 109-1002F40 (40PPI)

Beijing Hengrui Mechanical and Electrical Equipment Co,Ltd
+86 10-62547612 zhangyu@bjhengrui.cn en.bjhengrui.com

80×80×38 mm

San Ace 80 9HV type

General Specifications

- Material ..... Frame: Plastic (Flammability: UL 94V-0), Impeller: Plastic (Flammability: UL 94V-0)
- Expected life ..... See the table below. (L10 life: 90% survival rate for continuous operation in free air at 60˚C, rated voltage) Expected life at 40°C is for reference only.
- Motor protection function ..... Locked rotor burnout protection, Reverse polarity protection For details, please refer to p. 616.
- Dielectric strength ..... 50/60 Hz, 500 VAC, for 1 minute (between lead wire conductors and frame)
- Insulation resistance ..... 10 MΩ min. at 500 VDC (between lead wire conductors and frame)
- Sound pressure level (SPL) ..... A-weighted sound pressure level (SPL) at 1 m away from the air inlet.
- Storage temperature ..... -30 to +70˚C (Non-condensing)
- Lead wire ..... ⊕Red ⊖Black Sensor Yellow Control Brown
- Mass ..... 230 g

Specifications

The models listed below **have ribs and a pulse sensor with PWM control.** For models without ribs, append "1" to the end of model numbers.

Model no.	Rated voltage [V]	Operating voltage range [V]	PWM duty cycle* [%]	Rated current [A]	Rated input [W]	Rated speed [min⁻¹]	Max. airflow [m³/min]	Max. airflow [CFM]	Max. static pressure [Pa]	Max. static pressure [inchH₂O]	SPL [dB (A)]	Operating temperature [˚C]	Expected life [h]
9HV0812P1G601	12	10.8 to 13.2	100	3.4	40.8	14900	3.7	130.7	1000	4.0	69	-20 to +70	40000/60˚C (70000/40˚C)
			0	0.25	3	4400	1.06	37.5	87.2	0.35	40		
9HV0812P1H601			100	3	36	13500	3.35	118	870	3.49	67		
			0	0.12	1.44	2500	0.6	21.1	28.1	0.11	28		
9HV0812P1S601			100	2.1	25.2	12000	2.9	102	780	3.13	63		
			0	0.12	1.44	2500	0.6	21.1	28.1	0.11	28		
9HV0824P1G003	24	21.6 to 26.4	100	1.7	40.8	14900	3.7	130.7	1000	4.0	69		
9HV0848P1G001	48	36 to 57	100	0.85	40.8	14900	3.7	130.7	1000	4.0	69	-10 to +70	
			0	0.13	6.24	4400	1.06	37.5	87.2	0.35	40		

* PWM frequency is 25 kHz. Models without ratings for 0% PWM duty cycle have zero speed at 0%. When control terminal is open, speed is the same as at 100% duty cycle.

Note 1: The model number of the ribless model for 9HV0824P1G003 is 9HV0824P1G0011.
Note 2: Sensor and control options are available for selection. Refer to the table on p. 652.

Airflow - Static Pressure Characteristics / PWM Duty - Speed Characteristics Example

9HV0812P1G601 With pulse sensor with PWM control

PWM duty cycle

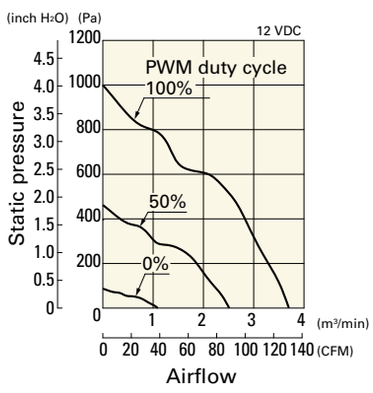

Operating voltage range

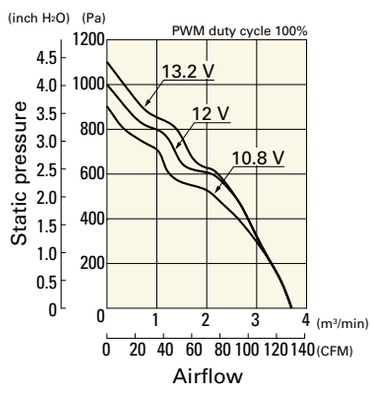

PWM duty - Speed characteristics example

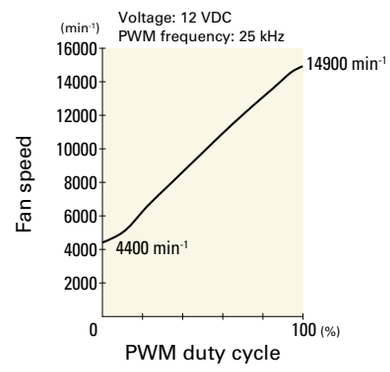

Beijing Hengrui Mechanical and Electrical Equipment Co,Ltd
+86 10-62547612 zhangyu@bjhengrui.cn en.bjhengrui.com

9HV0812P1H601 With pulse sensor with PWM control

PWM duty cycle

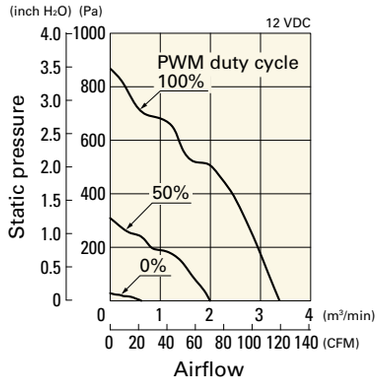

Operating voltage range

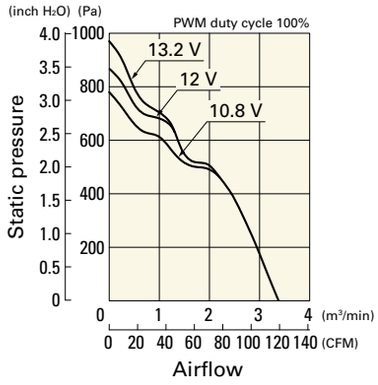

PWM duty - Speed characteristics example

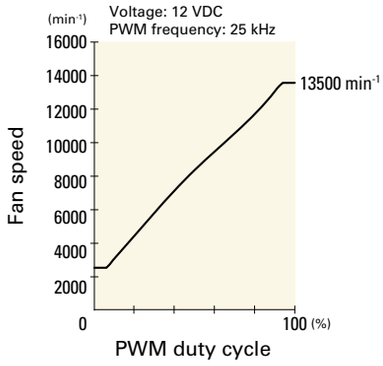

9HV0812P1S601 With pulse sensor with PWM control

PWM duty cycle

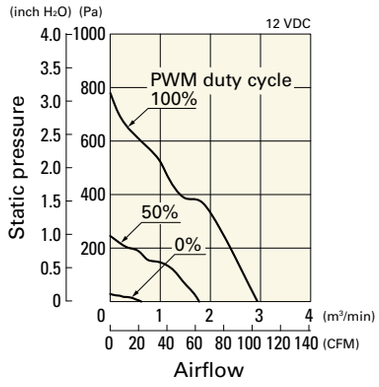

Operating voltage range

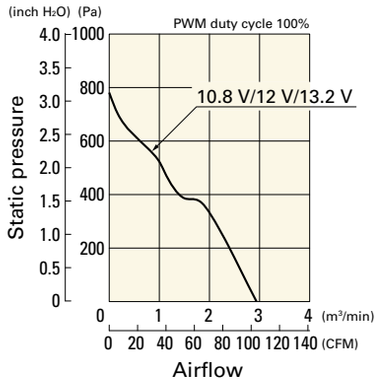

PWM duty - Speed characteristics example

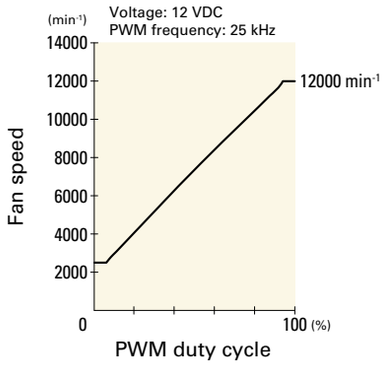

9HV0824P1G003 With pulse sensor with PWM control

PWM duty cycle

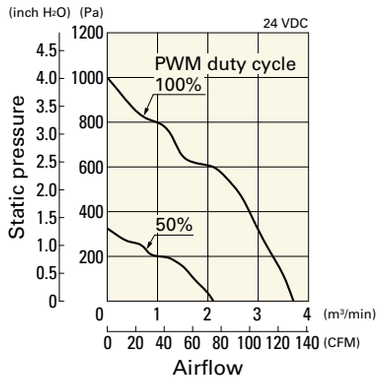

Operating voltage range

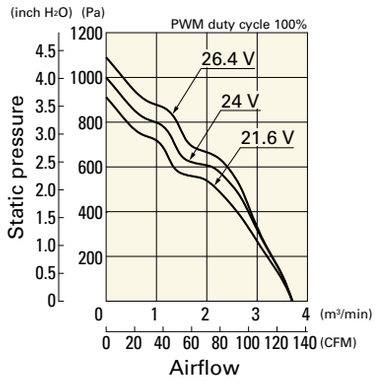

PWM duty - Speed characteristics example

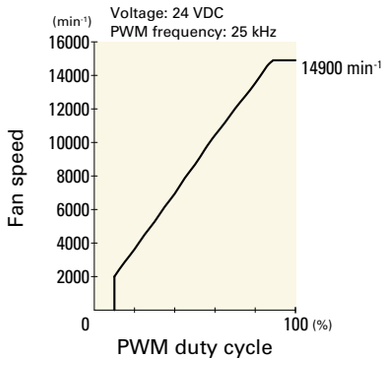

9HV0848P1G001 With pulse sensor with PWM control

PWM duty cycle

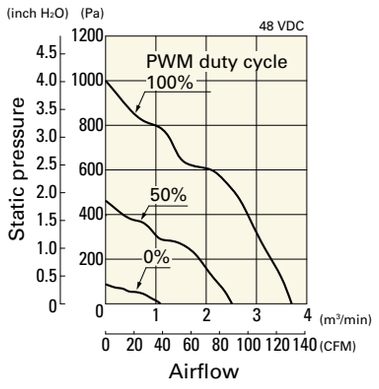

Operating voltage range

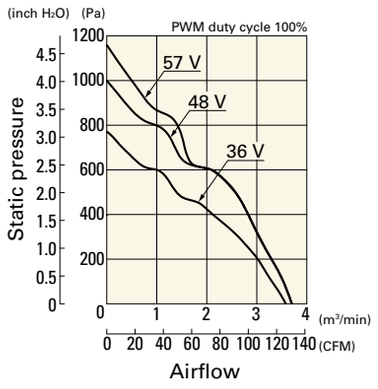

PWM duty - Speed characteristics example

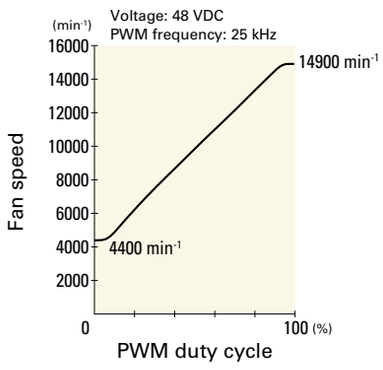

Beijing Hengrui Mechanical and Electrical Equipment Co,Ltd
+86 10-62547612 zhangyu@bjhengrui.cn en.bjhengrui.com

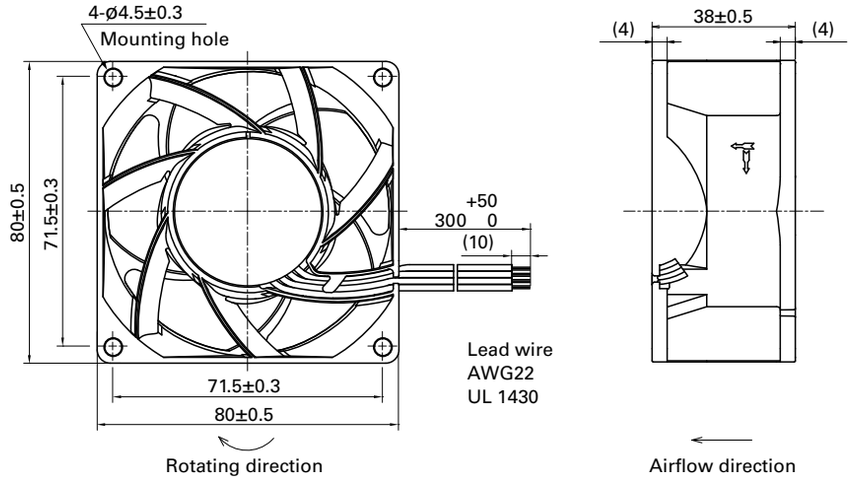

Reference Dimensions of Mounting Holes and Vent Opening (unit: mm)

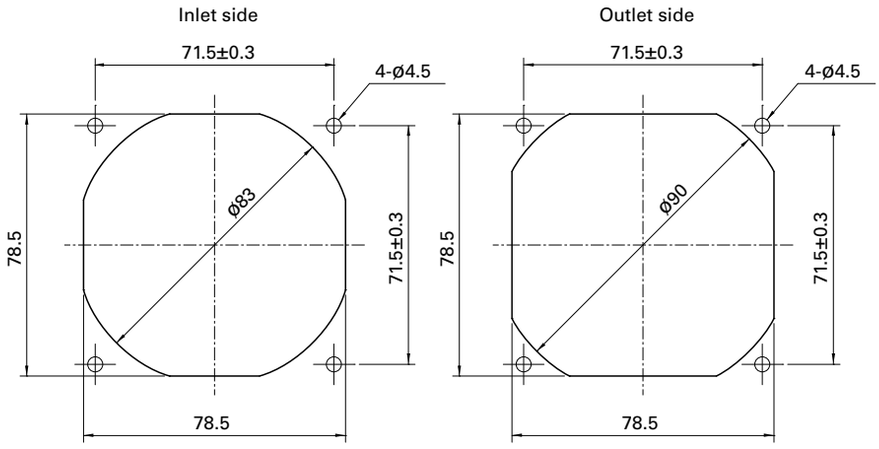

Options

Finger guards page: p. 598

Model no.: 109-049E, 109-049H

Resin filter kits page: p. 606

Model no.: 109-1002F13 (13PPI), 109-1002F20 (20PPI),
109-1002F30 (30PPI), 109-1002F40 (40PPI)

Resin finger guards page: p. 605

Model no.: 109-1002G

Beijing Hengrui Mechanical and Electrical Equipment Co,Ltd
+86 10-62547612 zhangyu@bjhengrui.cn en.bjhengrui.com